Heated and Humidified Breathing Circuits

Instructions for use

File No:MK24-01-030

Ver:V1.4

Product name: Heated and Humidified Breathing Circuits

Model: H-180S、H-180L、H-180SA

Manufacturer: Micomme Medical Technology Development Co., Ltd.

Manufacture address: No.6 Kesheng Road, Hi-Tech Zone,410221 Changsha, Hunan, PEOPLE'S REPUBLIC OF CHINA

Service hotline: +86 4000-2000-33

Website: www.micommed.com

Email：intl@micommed.com

Customer Service Center Email: service@micommed.com

Production date: see label

Period of Validity: 3 years

Revised on:

EU REP **Name:** Shanghai International Holding Corp. GmbH (Europe)

Add: Eiffestrasse 80, 20537 Hamburg, Germany

Tel: 0049-40-2513175

Fax: 0049-40-255726

CE 0123

Instructions for use

【Product model】

H-180S、H-180L、H-180SA

【Intended use】

The heated and humidified breathing circuits is for delivery of humidified respiratory gases.
For use with the heated humidified high flow nasal cannula oxygen therapy device (HFNC) produced by our company. Please do not use the circuits for other purposes.

【Intended users】

Adequately trained healthcare professionals.

【Intended target groups】

Adult and Pediatric patients with acute hypoxemic respiratory failure and acute hypercapnic respiratory failure.

【Indications and Contraindications】

Indications: Use with the heated humidified high flow nasal cannula oxygen therapy device(HFNC) for treating patients with acute hypoxemic respiratory failure and acute hypercapnic respiratory failure.

【Contraindications】

- Upper airway abnormalities that may make HFNC ineffective or potentially dangerous;
- Life-threatening hypoxia;
- Hemodynamic instability;
- Facial bone or skull base trauma;
- Pneumothorax;
- Altered consciousness;

- Face, nose, or airway abnormalities that do not allow for appropriate fit of the nasal cannula.
- Upper airway obstruction;
- The inability to protect the airway.

【Clinical Benefits】

Indirect clinical benefits: The Heated and Humidified Breathing Circuits is designed to prevent condensation of humidified air during the treatment. When combined with the heated humidified high flow nasal cannula oxygen therapy device, it ensures that the air temperature remains stable. This helps patients maintain a comfortable and continuous treatment.

【Product component drawing】

H-180S is composed of thread heating tube (Type R), humidification chamber adapter (Type M), and humidification chamber (HC100).
H-180L is composed of thread heating tube (Type D), humidification chamber adapter (Type M), and humidification chamber (HC100).
H-180SA is composed of thread heating tube (Type R), humidification chamber adapter (Type SA), and humidification chamber (HC100).

Thread heating tube (Type R or Type D)

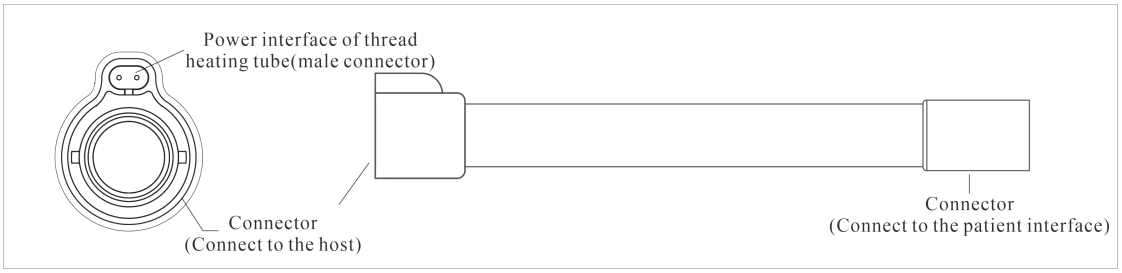

Humidification chamber adapter (Type SA)

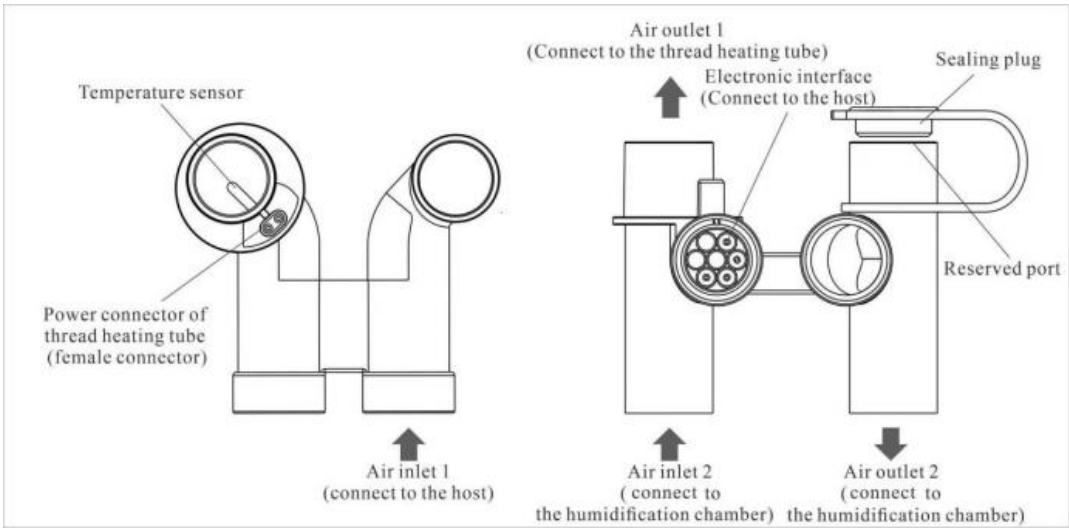

Humidification chamber adapter (Type M)

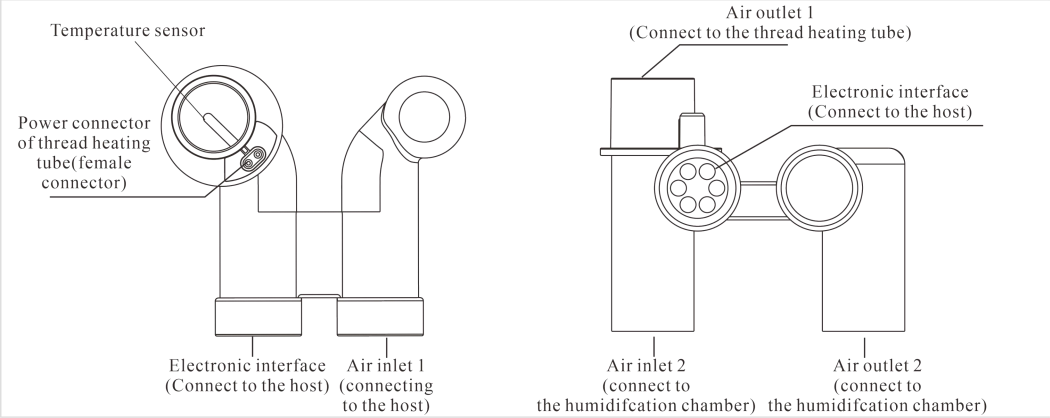

Humidification chamber (HC100)

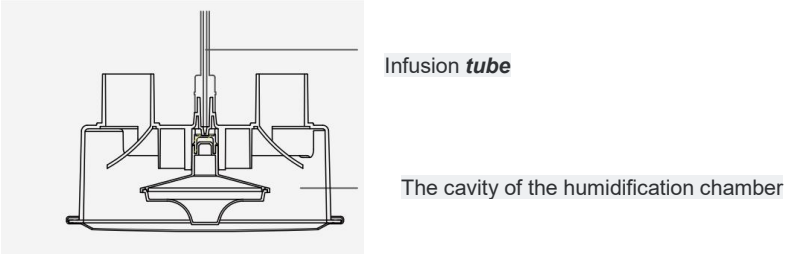

【Warnings】

1) Only for the use or guidance of trained medical professionals.
2) The device is intended for adult or paediatric patient use.
3) The device is intended for single patient use only.
4) The device is for single use, and intended to be used for a maximum of ***14*** days. Do not reuse the product, including soak, wash or disinfect. Reuse may result in transmission of infectious substances. Attempting to reprocess will result degradation of materials and render the product defective.
5) Using the circuits for longer than the specified time can result in serious

injury, including infection.

6) Use of a non-approved heated humidified high flow nasal cannula oxygen therapy device (HFNC) could impair performance or compromise safety.

7) Images shown are indicative only. If there is inconsistency between the image and actual product, the actual product shall govern.

8) Notice to users and/or patients: Any serious incident that has occurred in relation to the device should be reported using the contact details provided in this Instruction for Use and to the competent authority of the Member State in which the user and/or patient is established.

9) The device cannot be used in an MRI environment.

【Specifications】

<table>
<tr><td>Length</td><td>The length under resting condition (without extension) lying on a horizontal surface is 1.8 m
Margin of error: ±10%</td></tr>
<tr><td>Assembled end</td><td>The 22mm adaptors shall not detach from the breathing tube at a force of less than 45N.</td></tr>
<tr><td>Patient connection ports</td><td>22mm conical connectors complying with ISO 5356-1</td></tr>
<tr><td>Leakage limit</td><td>Leakage from breathing tubes shall not exceed 10 ml/min at (60 ±3) hPa [(60±3) cmH_2O]
Leakage from complete breathing circuits shall not exceed the leakage limit listed for the designated patient category as shown in the table below:
<table>
<tr><th>Patient Category</th><th>Intended delivered volume</th><th>Leakage limit ml/min</th><th>At pressure hPa (cmH_2O)</th></tr>
<tr><td>Adult</td><td>⩾300ml</td><td>70</td><td>60 ± 3</td></tr>
<tr><td>Paediatric</td><td>50ml <300ml</td><td>40</td><td>60 ± 3</td></tr>
</table></td></tr>
<tr><td>Resistance to flow</td><td>The resistance to flow at the flow listed for the designated patient category specified as shown in the table below：
<table>
<tr><th>Patient Category</th><th>Intended delivered volume</th><th>Flow resistance limit hPa/l/min (cmH_2O/l/min)</th><th>At flow (l/min)</th></tr>
<tr><td>Adult</td><td>⩾300ml</td><td>0.06</td><td>30</td></tr>
<tr><td>Paediatric</td><td>50ml<300ml</td><td>0.12</td><td>15</td></tr>
</table></td></tr>
</table>

<table>
<tr><td>The increase in flow resistance when breathing tubes are suspended</td><td>The increase in flow resistance when breathing tubes are suspended over a rigid cylinder shall not exceed 150 % of the value obtained when the tube is straight.</td></tr>
<tr><td>Compliance</td><td>The total compliance at the pressure listed for the designated patient category as shown in the table below：
<table>
<tr><td>Patient Category</td><td>Intended delivered volume</td><td>Compliance limit ml/hPa (ml/cmH_2O)</td><td>At pressure hPa (cmH_2O)</td></tr>
<tr><td>Adult</td><td>⩾300ml</td><td>5</td><td>60±3</td></tr>
<tr><td>Paediatric</td><td>50ml<300ml</td><td>4</td><td>60±3</td></tr>
</table></td></tr>
<tr><td>Axial strength of breathing tubes</td><td>Breathing tubes shall withstand an axial force of 45 N.</td></tr>
<tr><td>Capacity of the highest water level of the humidification chamber</td><td>(145±5) mL</td></tr>
<tr><td>Max. working pressure</td><td>6kPa (60cmH_2O)</td></tr>
<tr><td>Power Supply</td><td>
<table>
<tr><td>Voltage</td><td>Maximum Current</td></tr>
<tr><td>DC 24 V</td><td>1.85A</td></tr>
</table></td></tr>
<tr><td>Environmental condition</td><td>
<table>
<tr><td></td><td>Operation</td><td>Transport / Storage</td></tr>
<tr><td>Temperature</td><td>18℃—30℃（64℉—86℉）</td><td>-10℃—60℃（14℉—140℉）</td></tr>
<tr><td>Relative Humidity</td><td>15% ~ 73%（Non-condensing）</td><td>15% ~ 93%（Non-condensing）</td></tr>
<tr><td>Atmospheric pressure</td><td>790 ~ 1020 hPa</td><td>790 ~ 1020 hPa</td></tr>
<tr><td>Altitude range</td><td>0-2000m</td><td>N/A</td></tr>
</table>
Avoid direct sunlight exposure.</td></tr>
<tr><td>Service life</td><td>The device is for single use, and intended to be used for a maximum of 14 days.</td></tr>
<tr><td>Shelf life</td><td>3 years</td></tr>
<tr><td>Use in combination</td><td>Micommed HFNC device、Micommed Oxygen Nasal Cannula</td></tr>
<tr><td>Applied Part</td><td>Type BF Applied Part</td></tr>
<tr><td>Mode of operation</td><td>Continuous</td></tr>
<tr><td>Common equipment</td><td>Equipment not to be used in the presence of flammable anesthetic gas mixed with air or with oxygen or helium oxide.</td></tr>
</table>

Other requirement	The material of each component of the product does not contain natural latex.

Note: The nominal rated flow of the product is 40L/min.

【Installation and replacement instructions】

Warnings:

1) Please read all warnings before use and check whether the product is damaged. Do not use it if there is any damage.
2) If the DC voltage exceeds the range (refer to Specifications "Power Supply"), the product will not work properly.
3) If the circuits is damaged (such as broken hole, kink, tear, exposed heated wire, etc.) or poor function, please do not repair and use it by yourself and replace it immediately.
4) Do not pile too long tubes on the head of the bed, it is possible to entangle the head of the patient or neck in a deep sleep. The tubes should not be covered by the sheet or affected by the heating source (such as electric blanket), otherwise it may cause the deformation of the tubes to be dangerous.
5) When the product is not connected to the patient, avoid foreign matter entering the inside of the circuits.
6) Before each use, the circuits should be checked for damage or foreign matter. If so, please replace the circuits immediately.
7) When the water level in the humidification chamber cavity exceeds the maximum water level, the humidification chamber shall not be used as this way may led to water entering the patient’s airway.
8) If there is no water in the cavity of the humidification chamber, it cannot be used. It can only be used after reconnecting the water source or changing the humidification chamber to connect the water source.
9) Avoid product contact with chemicals, cleaning agents, or hand sanitizers.

To avoid burns:

- Do not contact the thread heating tube directly with the skin for prolonged periods of time.
- Do not cover the thread heating tube with any objects, including blankets, sheets, pillows, towels, clothing and so on, to avoid excessive airflow temperature, which may cause adhesion between the tube and these objects or stimulate the patient's airway.

- There is a risk of fire associated with oxygen equipment and therapy. Do not use near sparks or open flames.
- Smoking during oxygen therapy is dangerous and is likely to result in serious injury from fire.

To prevent condensation:

- Use in an environmental condition according to the specification.
- Remove/minimize the impact of anything that may cool the circuits, e.g. a fan, air conditioning, open window.

To manage excessive condensation:

- Place the circuits below patient head height.
- Drain condensate back into the humidification chamber. At higher target flow settings it may be necessary to first reduce the target flow setting to 30 L/min, to ensure that the condensate drains safely and effectively.
- Disconnect the patient interface from the heated breathing tube.
- Lift the patient end of the heated breathing tube, allowing the condensate to run into the humidification chamber.

【Installation instructions】

H-180S、H-180L: 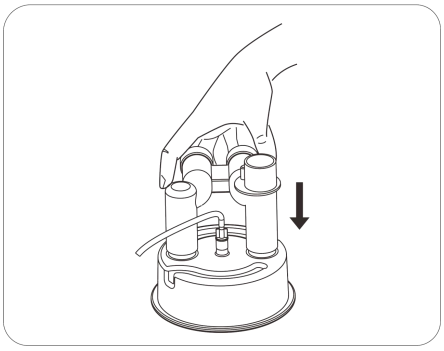 H-180SA:	Step1: Insert the humidification chamber adapter into the humidification chamber

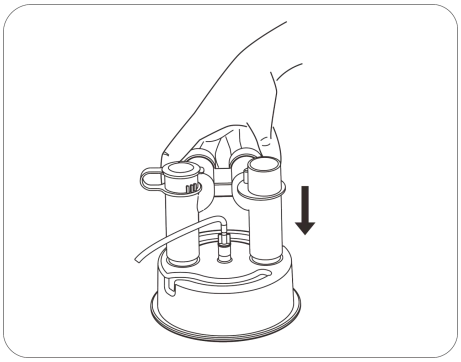	
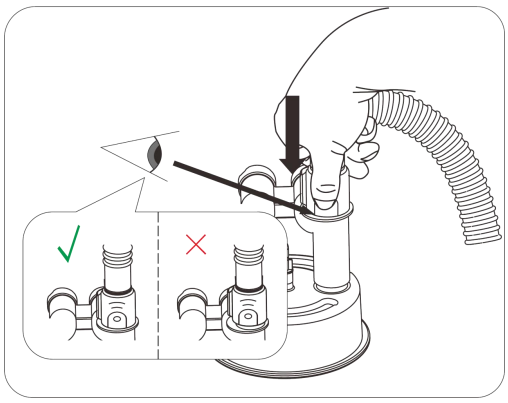	Step2: Insert the thread heating tube into the humidification chamber adapter. Please pay attention to the alignment of the power interface and buckle of the heating tube, and pay attention to the solid connection of the socket position. Note： ● If you need to separate the thread heating tube from the humidification chamber adapter, please press the marks on both sides. Do not pull out forcibly. 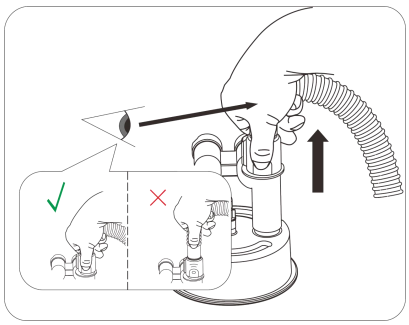 ● Make sure the sealing plug of H-180SA is firmly in place during use. Gas leakage may occur if the sealing port plug is not in place.

<table>
<tr>
<td> 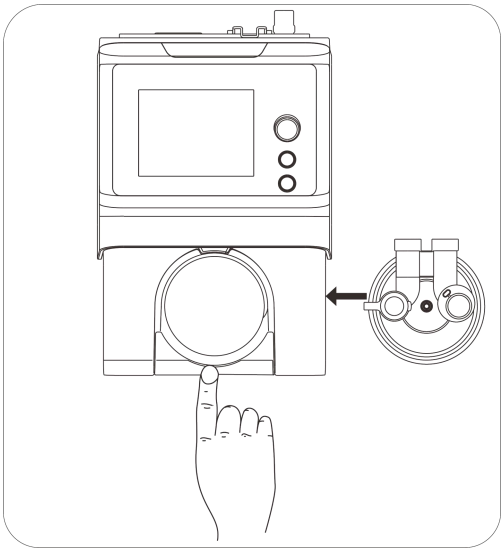 </td>
<td>Step 3: Install the humidification chamber on the heating plate of the device and ensure that the electronic circuit interface/air inlet of the humidification chamber adapter is inserted into the corresponding interface of the device.</td>
</tr>
<tr>
<td>H-180S、H-180L:
 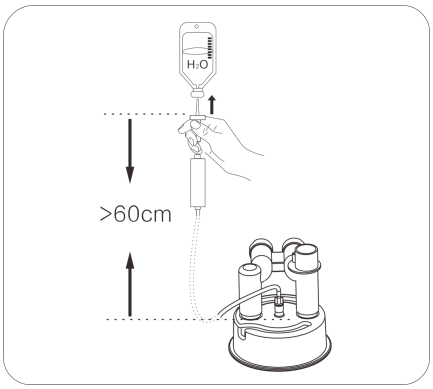

H-180SA:
 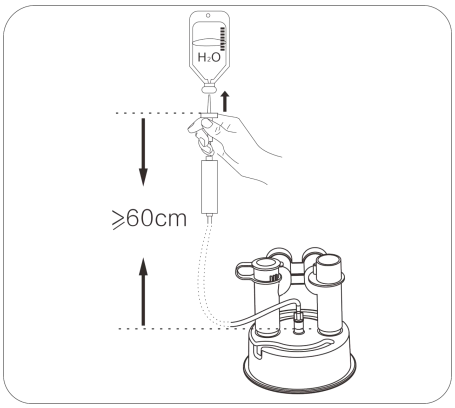
</td>
<td>Step 4: Connect the end of the infusion tube near the dripping gourd to the water bag, and connect the other end to the water injection port of the humidification chamber.
Note：
● Use Ph. Eur. sterile water for injection or equivalent. Adding other substances to the water can have adverse effects.
● If you need to inject water manually, ensure that the water level does not exceed the maximum water level.
 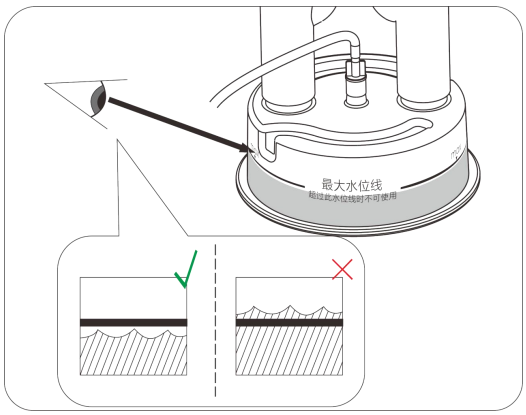
</td>
</tr>
<tr>
<td> </td>
<td>Step5：Connect the thread heating tube to the patient interface such as oxygen nasal cannula , tracheotomy, etc., and confirm whether it is firmly connected.</td>
</tr>
</table>

Note: Images shown are indicative only. If there is inconsistency between the image and actual product, the actual product shall govern.

【Replacement instructions】

1. Turn off the device;
2. Disconnect the circuits from the device;
3. Install a circuits according to the installation instructions.

【Disposal】

This procedure covers the correct disposal of electronic medical devices that are disposed by the hospital in accordance with the WEEE regulations as well as the hospital's own procedures.

Warning: WEEE must only be disposed of via hospital approved contractors and on no account can be taken home or resold for personal profit due to:

- The requirements of the WEEE directive
- The risk of incorrect disposal of hospital marked items
- The data protection issues associated with stored data

References:2012/19/EU Waste Electrical and Electronic Equipment (WEEE) Directive

Procedure

Once the hospital has determined the medical device is no longer serviceable and/or desires to dispose of the equipment, the device should be given to the hospital's designated e-waste recycling company for processing.

1. If the hospital has not already contracted with an e-waste recycling company, then the following link may be used to identify potential recycling companies.

EU:

https://www.environmental-expert.com/companies/keyword-electronic-waste-recycling-12718/location-europe

Worldwide:

https://www.environmental-expert.com/services?keyword=e-waste+recycling

2. Until the item(s) to be recycled are collected by a recycling company, the item(s)

should be placed in a secure, well-ventilated area that has no access to drains. lt must be kept separate from all other waste/reuse items.

【Product label, packaging label explanation】

Symbol	Definition	Symbol	Definition
NON STERILE	Non-sterile (ISO 7000-2609)		Caution (ISO 7000-0434A)
	Consult instructions for use or consult electronic instructions for use (ISO 7000-1641)		Type BF Applied Part (IEC 60417-5333)
	Do not use if package is damaged and consult instructions for use (ISO 7000-2606)	REF	Catalogue number (ISO 7000-2493)
	Do not re-use (ISO 7000-1051)		WEEE (EN 50419)
	Manufacturer (ISO 7000-3082)		Date of Manufacture (ISO 7000-2497)
	Use-by date (ISO 7000-2607)	LOT	Batch code (ISO 7000-2492)
60°C -10°C	Temperature limit (ISO 7000-0632)	93% 15%	Humidity limitation (ISO 7000-2620)
1020hPa 790hPa	Atmospheric pressure limitation (ISO 7000-2621)	n	Stacking limit by number （ISO7000-2403）
	Keep away from sunlight (ISO 7000-0624)		Fragile, handle with care (ISO 7000-0621)

Symbol	Definition	Symbol	Definition
	This way up (ISO 7000-0623)		Keep dry (ISO 7000-0626)
MD	Medical Device (ISO 15223-1)		Importer (ISO 7000-3725)
	Distributor (ISO 7000-3724)	CE 0123	CE Marking
UDI	Unique device identifier （ISO15223.1-5.7.1）	EU REP	Authorized representative in the European Community (ISO 15223-1:2021+AMD1:2025)
MR	MR Unsafe (ASTM F2503-23)		Non-ionizing electromagnetic radiation (IEC 60417-5140)

【EMC related instructions】

The circuits meets the requirements of IEC/EN 60601-1-2 for radiation emission and immunity.

The basic nature of EMC can be: "when EMC is tested, the heated and humidified breathing circuits works normally".

Warnings:

- The circuits can only be used in hospitals except for near active HF SURGICAL EQUIPMENT and the RF shielded room of an ME SYSTEM for magnetic resonance imaging, where the intensity of EM DISTURBANCES is high.
- Portable RF communications equipment (including peripherals such as antenna cables and external antennas) should be used no closer than 30 cm (12 inches) to any part of the circuits, including cables specified by the manufacturer. Otherwise, degradation of the performance of this equipment could result.
- Use of accessories, transducers and cables other than those specified or provided by the manufacturer of this equipment could result in increased electromagnetic emissions or decreased electromagnetic immunity of this equipment and result in improper operation.
- Use of this device adjacent to or stacked with other equipment should be avoided because it could result in improper operation. If such use is necessary, this equipment and the other equipment should be observed to verify that they are operating normally.

Matters needing attention

※ This device contains special tips on electromagnetic compatibility. The device should be installed and used according to the electromagnetic compatibility information in the random file.

The electromagnetic compatibility information of the equipment is shown in table 1, 2 and 3

Table 1

Guide and manufacturer's statement - electromagnetic emission	
The heated and humidified breathing circuits is expected to be equipped with the heated humidified high flow nasal cannula oxygen therapy device (HFNC) to be used in the following electromagnetic environment, and the buyer or user shall ensure that it is used in such environment:	
Emission test	compliance
RF emissions CISPR 11	Group 1
RF emissions CISPR 11	Class B
Harmonic emissions IEC 61000-3-2	Class A
Voltage fluctuations/ flicker emissions IEC 61000-3-3	Applicable

Table 2.

Guidance and manufacturer's declaration - electromagnetic immunity		
The heated and humidified breathing circuits is expected to be equipped with the heated humidified high flow nasal cannula oxygen therapy device (HFNC) to be used in the following electromagnetic environment, and the buyer or user shall ensure that it is used in such environment:		
Immunity test	IEC 60601-1-2Test level	Compliance level
Electrostatic discharge (ESD) IEC 61000-4-2	±8 kV contact ±2 kV, ±4 kV, ±8 kV, ±15 kV air	±8 kV contact ±2 kV, ±4 kV, ±8 kV, ±15 kV air
Electrical fast transient/burst IEC 61000-4-4	±2 kV for power supply lines ±1 kV signal input/output 100 kHz repetition frequency	±2 kV for power supply lines Not Applicable 100 kHz repetition frequency
Surges IEC 61000-4-5	±0.5 kV, ±1 kV differential mode ±0.5 kV, ±1 kV,±2kV common mode	±0.5 kV, ±1 kV differential mode Not Applicable
Voltage dips, short interruptions and voltage variations on power supply input lines IEC 61000-4-11	0% U_T; 0,5 cycle. At 0°, 45°, 90°, 135°, 180°, 225°, 270° and 315°. 0 % U_T; 1 cycle and 70 % U_T; 25/30 cycles; Single phase: at 0°. 0 % U_T; 250/300 cycle	0% U_T; 0,5 cycle. At 0°, 45°, 90°, 135°, 180°, 225°, 270° and 315°. 0% U_T; 1 cycle and 70 % U_T; 25/30 cycles; Single phase: at 0°. 0 % U_T; 250/300 cycle
Power frequency magnetic field IEC 61000-4-8	30 A/m 50Hz/60Hz	30 A/m 50Hz/60Hz
Conduced RF IEC 61000-4-6	3V 0,15 MHz – 80 MHz 6 V in ISM and amateur radio bands between 0,15 MHz and 80 MHz 80 % AM at 1 kHz	3V 0,15 MHz – 80 MHz 6 V in ISM and amateur radio bands between 0,15 MHz and 80 MHz 80 % AM at 1 kHz
Radiated RF IEC61000-4-3	10 V/m 80 MHz – 2,7 GHz 80 % AM at 1 kHz	10 V/m 80 MHz – 2,7 GHz 80 % AM at 1 kHz
NOTE: UT is the a.c. mains voltage prior to application of the test level.		

Table 3

Guidance and manufacturer's declaration- electromagnetic Immunity					
Recommended isolation distance between portable and mobile radio frequency communications equipment and the circuits.					
The heated and humidified breathing circuits is expected to be used in radio frequency controlled electromagnetic environments. Based on the maximum power output of the communication equipment, purchasers or users of the spire heated breathing line can prevent electromagnetic interference by maintaining a minimum distance between the portable and mobile rf communication equipment (transmitters) and the spire heated breathing line.					
	Test Frequency (MHz)	Band (MHz)	Service	Modulation	Immunity Test Level(V/m)
Radiated RF IEC61000-4-3(Test specifications for ENCLOSURE PORT IMMUNITY to RF wireless communications equipment)	385	380-390	TETRA 400	Pulse modulation 18 Hz	27
	450	430-470	GMRS 460, FRS 460	FM±5kHz deviation 1kHz sine	28
	710	704-787	LTE Band 13,17	Pluse modulation 217 Hz	9
	745				
	780				
	810	800-960	GSM 800/900,TETRA 800, iDEN 820, CDMA 850,LTE Band 5	Pulse modulation 18Hz	28
	870				
	930				
	1720	1700-1990	GSM 1800; CDMA 1900; GSM 1900; DECT; LTE Band 1,3,4,25;UMTS	Pulse modulation 217 Hz	28
	1845				
	1970				
	2450	2400-257	Bluetooth,	Pulse	28

		0	WLAN, 802.11b/g/n, RFID 2450, LTE Band 7	modulation 217Hz	
	5240	5100-5800	WLAN 802.11a/n	Pulse modulation 217Hz	9
	5550				
	5785				